Faculty of Engineering

DEVELOPMENT AND MODELING OF THREE PHASE INVERTER FOR HARMONIC IMPROVEMENT USING SINUSOIDAL PULSE WIDTH MODULATION (SPWM) CONTROL TECHNIQUE

Evenna Anak Lingking

Bachelor of Engineering (Hons)

Electrical and Electronics Engineering

2018

UNIVERSITI MALAYSIA SARAWAK

Grade: _____

Please tick (√)

Final Year Project Report	√
Masters	
PhD	

DECLARATION OF ORIGINAL WORK

This declaration is made on the 7th day of June 2018.

Student's Declaration:

I, EVENNA ANAK LINGKING, 46748 from FACULTY OF ENGINEERING hereby declare that the work entitled DEVELOPMENT AND MODELING OF THREE PHASE INVERTER FOR HARMONIC IMPROVEMENT USING SINUSOIDAL PULSE WIDTH MODULATION (SPWM) CONTROL TECHNIQUE is my original work. I have not copied from any other students' work or from any other sources except where due reference or acknowledgement is made explicitly in the text, nor has any part been written for me by another person.

13/6/18

Date submitted

Evenna Anak Lingking (46748)

Supervisor's Declaration:

I, DR. YONIS M YONIS BUSWIG hereby certifies that the work entitled DEVELOPMENT AND MODELING OF THREE PHASE INVERTER FOR HARMONIC IMPROVEMENT USING SINUSOIDAL PULSE WIDTH MODULATION (SPWM) CONTROL TECHNIQUE was prepared by the above named student and was submitted to the FACULTY OF ENGINEERING as a partial for the conferment of BACHELOR OF ENGINEERING (HONS) ELECTRICAL AND ELECTRONICS ENGINEERING, and the aforementioned work, to the best of my knowledge, is the said student's work.

Received for examination by: _____ Date: 7/6/18

(Dr. Yonis M Yonis Buswig)

Dr Yonis M Yonis Buswig
Lecturer
Department of Electrical
and Electronic Engineering
Faculty of Engineering
UNIVERSITI MALAYSIA SARAWAK

I declare that Project/Thesis is classified as (Please tick (√)):

☐	**CONFIDENTIAL**	(Contains confidential information under the Official Secret Act 1972)*
☐	**RESTRICTED**	(Contains restricted information as specified by the organisation where research was done)*
☑	**OPEN ACCESS**	

Validation of Project/Thesis

I therefore duly affirmed with free consent and willingness declare that this said Project/Thesis shall be placed officially in the Centre for Academic Information Services with the abiding interest and rights as follows:

- This Project/Thesis is the sole legal property of Universiti Malaysia Sarawak (UNIMAS).
- The Centre for Academic Information Services has the lawful right to make copies for the purpose of academic and research only and not for other purpose.
- The Centre for Academic Information Services has the lawful right to digitalise the content for the Local Content Database.
- The Centre for Academic Information Services has the lawful right to make copies of the Project/Thesis for academic exchange between Higher Learning Institute.
- No dispute or any claim shall arise from the student itself neither third party on this Project/Thesis once it becomes the sole property of UNIMAS.
- This Project/Thesis or any material, data and information related to it shall not be distributed, published or disclosed to any party by the student except with UNIMAS permission.

Student signature _____ (13/6/18)

Supervisor signature: _____ (7/6/18)

Current Address:

_____

_____

Notes: * If the Project/Thesis is **CONFIDENTIAL** or **RESTRICTED**, please attach together as annexure a letter from the organisation with the period and reasons of confidentiality and restriction.

[The instrument is duly prepared by The Centre for Academic Information Services]

DEVELOPMENT AND MODELING OF THREE PHASE INVERTER FOR HARMONIC IMPROVEMENT USING SINUSOIDAL PULSE WIDTH MODULATION (SPWM) CONTROL TECHNIQUE

EVENNA ANAK LINGKING

A dissertation submitted in partial fulfilment

of the requirements for the degree of

Bachelor of Engineering with Honours

(Electrical and Electronics Engineering)

Faculty of Engineering

Universiti Malaysia Sarawak

2018

ACKNOWLEDGEMENT

Firstly, I would like to thank my final year project supervisor, Dr. Yonis M. Yonis Buswig of Universiti Malaysia Sarawak from Electrical and Electronic Engineering department for his guidance and valuable comments throughout the process of the project.

I would also like to thank my friends for listening to my problems and helping me over the past four years. I would like to thank the Lab instructors and technicians for the help and tolerance throughout the process of the project.

Most importantly, the encouragement, financial support and love from my parents, Lingking and Lily throughout the four years undergraduate study.

ABSTRACT

The final year project report with a title of Development and Modeling of Three Phase Inverter for Harmonic Improvement Using Sinusoidal Pulse Width Modulation (SPWM) Control Technique is presented. The inverter converts electrical signal from Direct Current (DC) to Alternating Current (AC). An internal control technique of an inverter is Pulse Width Modulation (PWM) technique. The Sinusoidal Pulse Width Modulation (SPWM) technique is a type of the PWM that is used in this project to control the output of the inverter. Today, harmonics has become the common problem because there are many modern electronics equipment. The incidence of harmonic related problems in power system distribution is high, so awareness of harmonic issue can help to increase plant power reliability. The objectives of the final year project are to model and simulate the three phase inverter system with a suitable topology using the MATLAB Simulink software, to develop a control strategy of the three phase inverter circuit, to design and demonstrate the laboratory prototype for three phase inverter and last but not least to analyze the total harmonic distortion (THD) for the three-phase inverter using the proposal SPWM control. The development and modeling of three phase inverter for harmonic improvement by using the SPWM control technique is implemented in the software and hardware parameters. The software that is used in the project is MATLAB Simulink. The hardware that are used in the project are Digital Signal Processors (DSPs), Printed Circuit Board (PCB), Gate Driver Circuit and Insulated Gate Bipolar Transistor (IGBTs) switches. A perfect sine wave and smooth supply are obtained from the inverter using the SPWM technique. The minimum of harmonic incidence are obtained from the project outcomes. Hence, the SPWM technique improved the performance of equipment and the power quality.

ABSTRAK

Laporan projek akhir tahun dengan tajuk Pembangunan dan Pemodelan Tiga Fase Inverter untuk Pembaikan Harmonik Menggunakan Teknik Kawalan Pulse Pulse Sinusoidal (SPWM) dibentangkan. Inverter menukar isyarat elektrik dari Direct Current (DC) ke Alternating Current (AC). Teknik pengendalian dalaman penyongsang adalah teknik Pulse Width Modulation (PWM). Teknik Sinusoidal Pulse Width Modulation (SPWM) adalah sejenis PWM yang digunakan dalam projek ini untuk mengawal output penyongsang. Hari ini, harmoni telah menjadi masalah biasa kerana terdapat banyak peralatan elektronik moden. Insiden masalah berkaitan harmonik dalam pengagihan sistem kuasa tinggi, jadi kesedaran mengenai isu harmonik dapat membantu meningkatkan kebolehpercayaan daya tumbuhan. Objektif projek akhir adalah untuk membuat model dan mensimulasikan sistem inverter tiga fasa dengan topologi yang sesuai dengan menggunakan perisian MATLAB Simulink, untuk membangunkan strategi kawalan bagi tiga fasa inverter litar, untuk mereka bentuk dan mempamerkan prototaip makmal untuk tiga fasa penyongsang dan terakhir tetapi tidak kurang untuk menganalisis jumlah penyimpangan harmonik (THD) untuk inverter tiga fasa menggunakan kawalan SPWM cadangan. Pengembangan dan pemodelan tiga inverter fasa untuk peningkatan harmonik dengan menggunakan teknik kawalan SPWM dilaksanakan dalam parameter perisian dan perkakasan. Perisian yang digunakan dalam projek ini ialah MATLAB Simulink. Perkakasan yang digunakan dalam projek ini ialah Pemproses Isyarat Digital (DSP), Papan Litar Bercetak (PCB), Litar Pemandu Pintu dan suis Transistor Bipolar Transistor (IGBTs) yang Bertebat. Gelombang sinus sempurna dan bekalan halus diperolehi daripada penyongsang menggunakan teknik SPWM. Asas harmonik minimum diperoleh dari hasil projek. Oleh itu, teknik SPWM dapat meningkatkan prestasi peralatan dan kualiti tenaga.

TABLE OF CONTENTS

LIST OF TABLES

LIST OF FIGURES

LIST OF ABBREVIATION

AC	-	Alternating Current
BJTs	-	Bipolar Junction Transistor
CSI	-	Current Source Inverter
DSP	-	Digital Signal Processors
DC	-	Direct Current
EMI	-	Electromagnetic Interferences
IGBT	-	Insulated-Gate Bipolar Transistors
MI	-	Modulation Index
MOSFET	-	Metal Oxide Semiconductor Field Effect Transistor
PCB	-	Printed Circuit Board
PWM	-	Pulse Width Modulation
SPWM	-	Sinusoidal Pulse Width Modulation
SVPWM	-	Space Vector Pulse Width Modulation
THD	-	Total Harmonic Distortion
THIPWM	-	Third-Harmonic Injection PWM
UPS	-	Uninterruptable Power Supply
VFD	-	Variable Frequency Drives
VSI	-	Voltage Source Inverter

CHAPTER 1

INTRODUCTION

1.1 Introduction

The chapter 1 which is the introduction of the final year project is explained in detail which focus on the project background, problem statement, project objectives and expected outcomes of the project.

1.2 Project Background

Power supply is important as it supplies electrical energy to an electrical load. There are two types of power supply which are alternating current (AC) and direct current (DC). Most of the home appliances and office outlet are using AC power supply meanwhile DC power supply is use in the devices that can store energy such as batteries. Renewable energy such as solar and wind also produce DC power. The DC power output of the renewable energy sources is stored in the battery. The batteries are essential as the back-up power supply if there is sudden power outage or blackout. However, the power stored in the batteries cannot be use directly as it need to be convert from DC form to AC form. Therefore, here comes the concept of power inverter.

Inverter is a device that converts DC form to an AC form with desired magnitude and frequency. An inverter becomes a critical component for the flow of electricity from the renewable energy source such as solar module to storage battery, loads and grids. A good quality of inverter is used to use the power efficiently. Besides that, the inverter is use for hydro-power and generator power because it is environmental friendly as the fuel consumption cost and service for the generator is reduce.

Nowadays, pulse width modulation (PWM) inverters are frequently used than other types of inverters such as third-harmonic injection PWM (THIPWM) and space vector pulse width modulation (SVPWM). The amplitude pulses are the characteristics of the PWM techniques. The modulation of the width of the amplitude pulses produce or generate the output voltage control. In this era, there are various PWM techniques but sinusoidal (PWM) is the most widely used PWM schemes for three phase inverter. The SPWM technique is a better choice because it provides fewer harmonic.

This project will give benefits to the society as the world is now heading to the use of digital control technology which is widely used in variety of equipment. This project is also simple, easy to implement, more efficiency and thus reduces harmonic.

1.3 Problem Statement

Today, harmonics has become the common problem because there are many modern electronics equipment. These types of nonlinear loads are causing many problems such as generate harmonics, poor power factor on the AC side and distortion of AC voltages that affect the performance of the equipment.

The incidence of harmonic related problems in power system distribution is high, so awareness of harmonic issue can help to increase plant power reliability. There are several modulation techniques that is used to cater the output variable which have maximum basic component with minimum harmonic and less switching losses. This techniques make the applications operate smoothly. Therefore, sinusoidal PWM is used in this project as the modulation technique to control the output of the inverter.

1.4 Objectives of The Project

The objectives of the final year project are as follow:

i. To model and simulate the three phase inverter system with a suitable topology using the MATLAB Simulink software.
ii. To develop a control strategy of the three phase inverter circuit.
iii. To design and demonstrate the laboratory prototype for three phase inverter.
iv. To analyze the total harmonic distortion (THD) for the three-phase inverter using the proposal SPWM control.

1.5 Expected Outcomes

The expected outcomes of the project is to develop and modeling of three phase inverter for harmonic improvement using the SPWM control technique by using software and hardware implementation. The development and modelling of the three phase inverter and the SPWM control technique are implemented by using the MATLAB Simulink. Upon successful of the development using the software, the hardware part is built.

After the development and modeling of the project, some graphical results from the simulation are expected from the simulation and the implementation of the project parameters. Based on the results, a perfect sine wave and smooth supply are expected from the project. Besides that, this project is expected to eliminate lower order harmonic.

The minimum of harmonic incidence are obtained from the project outcomes. Hence, the SPWM technique is expected to improve the performance of equipment and the power quality.

CHAPTER 2

LITERATURE REVIEW

2.1 Introduction

Power electronics is an advance technology that involves with the control and conversion of electric power from its input into output form. The power electronics technology from the name itself deals with transformation or conversion techniques with the help of electronic devices such as power semiconductor devices.

Majorly there are five types of power electronic circuits which are rectifiers, chopper, inverters, AC voltage controllers and cycloconverters. Each of the five type power electronic circuits carried different purpose. Since the final year project deals with inverter, the report consists of more explanations and discussion about an inverter. Inverter are widely used in the world as a function to converts DC form to AC form having variable amplitude and variable frequency.

The output voltage of the inverter is control by the internal control of the inverter. The internal control means that it is control in the inverter itself and not by controlling the incoming dc output or outgoing ac output to control the output voltage. Pulse Width Modulation (PWM) is the method for the internal control of an inverter as stated in previous studies [1]. According to several articles [2], [3] there are various types of PWM control techniques in the three phase inverter such as sinusoidal pulse width modulation (SPWM), third-harmonic injection PWM (THIPWM) and space vector pulse width modulation (SVPWM). The SPWM technique is discussed further in this project.

2.2 Inverter

Inverters are power electronics converter which transforms a direct current (DC) form to an alternating current (AC) form. Inverters is one of the important electronic devices that are used in ac motor drive systems, renewable energy sources and uninterruptable power supply (UPS) systems. AC electricity is very useful because it could generate high voltages for long distance without going weaker. AC electricity is also more effective and less costly than DC electricity.

Inverter is classified into two types which are voltage source inverter (VSI) and current source inverter (CSI) [4]. The classification can be identified by the source or input to the inverter. The inverter is VSI if the source or input is DC voltage and it is controlling the output voltage of AC. While for the CSI type of inverter, the input is current source and it is controlling the output current of AC.

The final year project used the VSI type of inverter for the following reason. As can be compared to the CSI, VSI used voltage as its input and the value is maintained constant. Since this project involves the control scheme, VSI is used because of its term of efficiency and ease of control [5] . The current source for the input of CSI is constant but it is adjustable. The project is dealt with the three phase inverter where the power semiconductor devices are used. Therefore, VSI type is used because it works with complicated circuit and with the power semiconductor devices [6] such as the IGBT that are used in the project. While for the CSI, it cannot be used because it only works for a simple circuit and cannot withstand the reverse voltage. According to the article [7], VSI has limited or zero impedance at the input terminals that cause the shape of the DC does not easily changed while CSI is has high impedance that comes from the DC source current. These can be subdivided into single phase inverter and three phase inverter.

The types of inverters are based on the production of the three types of different outputs which are the square wave inverter, the modified sine wave inverter and a pure sine wave inverter. Figure 2.1 presents the three types of the of output waveform. The square wave inverter is the simplest type of inverter which generates a symmetrical square wave and almost the same as pure sine wave except that it is not smooth. It converts a constant DC signal to a phase shifting AC signal. Square wave inverter consists of negative and positive level. Previous studies [8], [9], [10] have reported that event though the cost of the square wave is less expensive, it have some disadvantages such as it contains high harmonics thus it is not suitable to use for the electronic devices or the

inductive loads. Therefore, it is not efficient for the running appliances because the power consumption by the square wave type inverter is high.

A modified sine wave inverter is a little complicated than a simple square wave inverter. It generates square alike wave output. It is almost similar to the square wave inverter output except that it has an addition for the level which is zero level or volts. Before it switch to the positive or negative level, it have to stop at the zero level. Hence, the sequence is positive-zero-negative and repeats between the three levels. The modified sine wave have some drawback that is similar to the square wave inverter. Several studies [8], [11], [12] describes the modified sine wave require a simple hardware structure but it contains high distortion that comes from the harmonics and this lead to the low efficiency of power quality due to the power loss. Besides that, this type of inverter cause extra heat and produce hissing or audible noise for the running ac motor [8].

A pure sine wave inverter transforms DC supply into a nearly sinusoidal waveform. Several published papers [8], [11], [13] described the pure sine wave inverter is expensive due to the complex structure or design, however, it has the lowest level of harmonic distortion and EMI compared to the others. Furthermore, it has high efficiency because it consumes less power and less heat generation. Thus, this causes a very clean supply and reduces noise that is suitable for working with motors, electronic system and sensitive equipment. In addition, it works with the PWM technique.

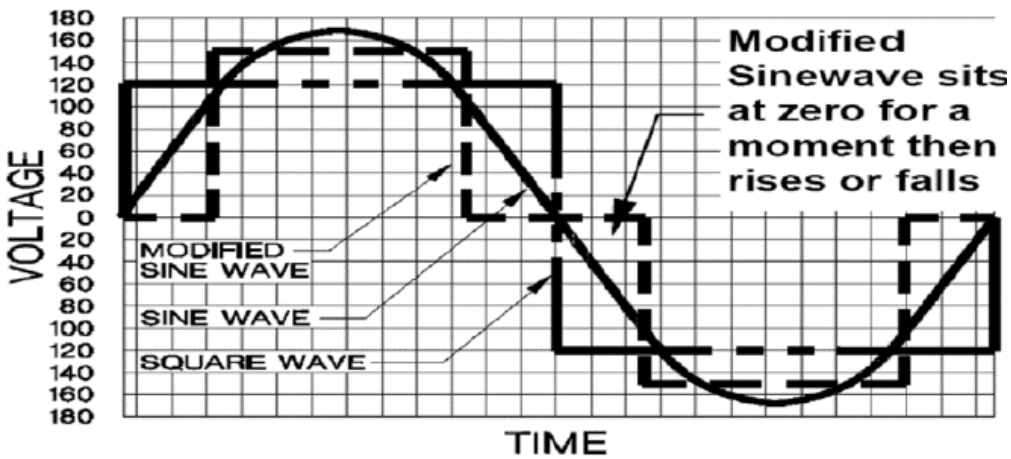

Figure 2.1 : Types of output waveform of inverters [14]

2.3 Three Phase Inverter

Since this project only deals with three phase inverter, the three phase inverter is discussed further in the report.

2.3.1 Construction of Three Phase Inverter

Three phase inverter is a device to transform a constant DC input voltage to three phase of AC voltage. The circuit of the three phase inverter that are designed with the Proteus software is presented in the Figure 2.2. A published paper [15] described that the three single phase inverters can be connected in parallel to obtain a three phase output.

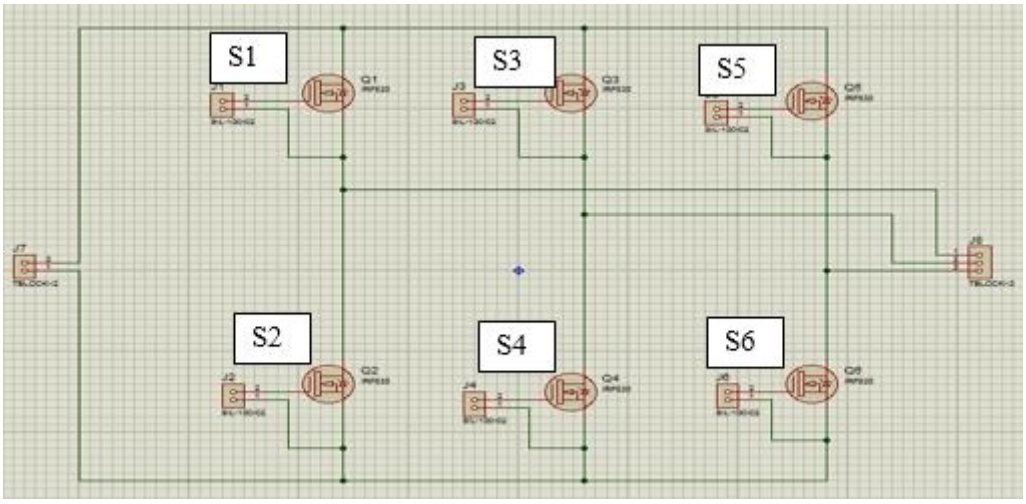

Figure 2.2: Three Phase Inverter Circuit

Based on the Figure 2.2, the circuit has six controlled switches which consists of upper controlled switches and lower controlled switches. The upper controlled switches are namely as S1, S3 and S5 while the lower controlled switched are namely as S2, S4 and S6. The three phase inverter circuit has three branches and each of the branches is connected to one of the three phase voltages. Each of the branches has two controlled switches. The first branch, namely branch A consists of S1 and S2 controlled switches. The second branch which is leg B, consist of S3 and S4 while the last branch, branch C consists of S5 and S6 controlled switches.

The circuit are divided into two halves. The positive half are consists of switches S1, S3 and S5 and the negative half consists of the switches S2, S4 and S6. As can be

seen in Figure 2.3, the S1, S3 and S5 will conduct during the positive half cycle of three phase output voltage whereas S2, S4, and S6 will conduct during the negative half cycle of three phase output voltage.

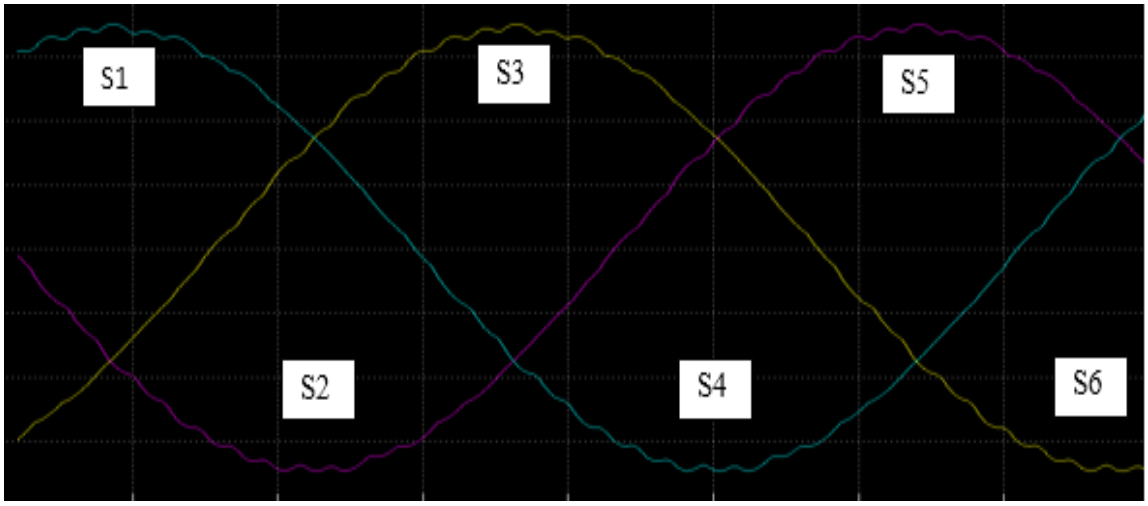

Figure 2.3: Output Voltage of Three Phase

The two switches in one branch cannot be turn on at the same time. For example, in branch A, only S1 is on while S2 is off when voltage is applied to the circuit and vice versa.

2.3.2 Operation of Three Phase Inverter

This project discuss with the 120 degree conduction mode for the operation of three phase inverter. The six switches; S1, S2, S3, S4, S5, and S6 in the circuit (referred to Figure 2.2) conduct for 120 degree of cycles in one period of 360 degree of the output for each one of the switch. The complete one cycle of output waveform (referred to Figure 2.3) required six steps of 60 degree duration. There are only two switches that can conduct at one time. The conducted two switches must be one from the upper side (S1, S3, and S5) and one from the lower side (S2, S4 and S6). There are six sub-interval where each of the sub is 60 degree each.

Table 1 shows the sub-interval of the 60 degree duration which operate two switches only, one from upper group and one from the lower group [16]-[17]. The waveform of the 120 degree conduction is present in the Figure 2.4.

Table 1. Switching of 120 Degree Conduction mode

Intervals or Mode	S1	S2	S3	S4	S5	S6
0 to 60°	On	Off	Off	Off	Off	On
60 to 120°	On	On	Off	Off	Off	Off
120 to 180°	Off	On	On	Off	Off	Off
180 to 240°	Off	Off	On	On	Off	Off
240 to 300°	Off	Off	Off	On	On	Off
300 to 360°	Off	Off	Off	Off	On	On

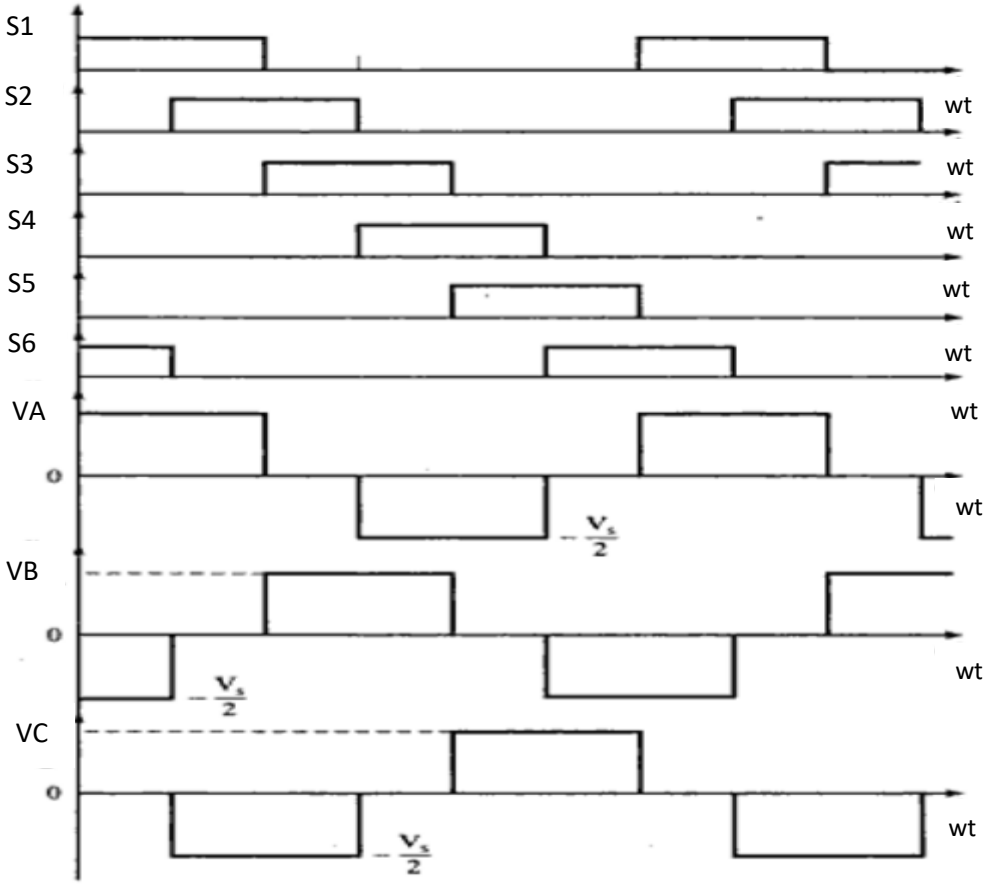

Figure 2.4: Waveform of 120 Degree Conduction Mode [17]

2.4 Pulse Width Modulation

The PWM techniques are mainly used for voltage control. There are various types of PWM control techniques in the three phase inverter such as third-harmonic injection PWM (THIPWM), Sinusoidal pulse width modulation (SPWM) and space vector pulse width modulation (SVPWM). This project deals or discusses the SPWM only.

PWM technique is use for the internal control of an inverter. In this technique, inverter produced the output voltage waveform that has been modified by using the switching scheme. A fixed DC input voltage is supplied to the inverter and a controlled AC output voltage is produced by controlling the duty ratio of a pulsating waveform [18].

The advantages of PWM technique or switching strategies are less total harmonic distortion (THD), Electromagnetic Interferences (EMI) reduction, switching losses reduction, and better spreading of Harmonics over spectrum [19]. The PWM inverter also has the simplicity and rugged control scheme.

2.4.1 Principle of Pulse Width Modulation

PWM is a digital modulation technique in which the value of the information signal changed the width of the pulse carrier. The schematic diagram of PWM is shown in the Figure 2.5. Inside the comparator, there are two signal which are the carrier wave and the reference wave. This two signals is compared to produce output pulses of SPWM.

The PWM is implemented by comparing the message signal which is in blue colour with sawtooth carrier which is in red colour in the Figure 2.6. If the message signal (blue colour) is greater than the carrier signal (red colour), the comparator output becomes high. The high output is represented by the +1 and the low is presented by -1. The output of the comparator is the pulse width modulated signal which is the green in colour in the Figure 2.6.

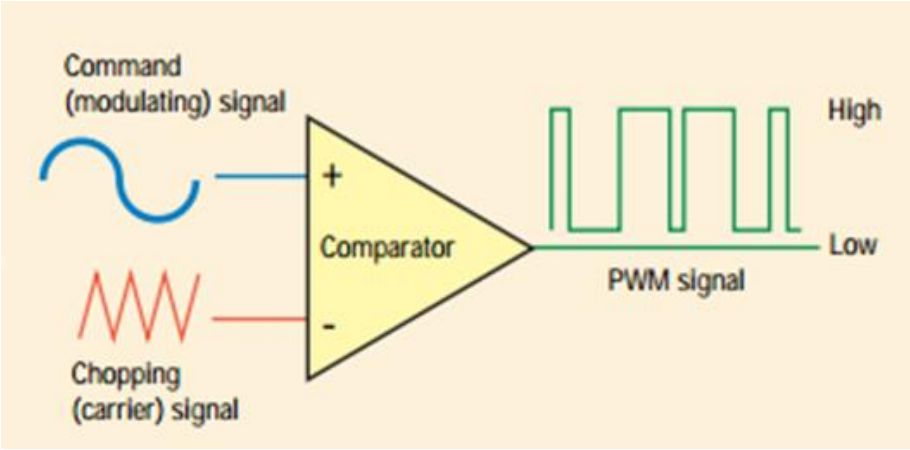

Figure 2.5: Schematic Diagram of PWM [20]

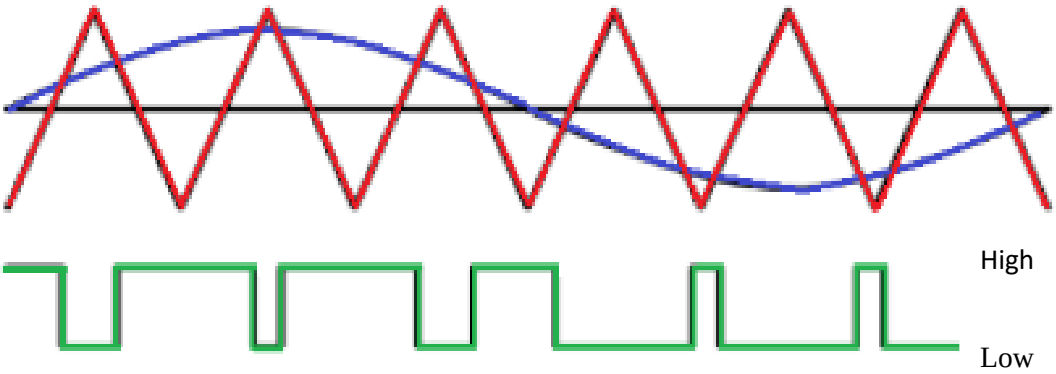

Figure 2.6: Pulse Width Modulation [21]

The widths of the pulses are varying according to the signal amplitude. When the value of the amplitude is high, the length of the widths of the pulses is increased. While when the amplitude is low, the length of the widths of the pulses is decreased. The pulse width is high at the high value of signal amplitude and short at low level.

2.5 Sinusoidal Pulse Width Modulation (SPWM)

The sinusoidal pulse width modulation (SPWM) technique is the easiest modulation scheme to understand. The schemes is easy to use in the software and hardware. The SPWM technique is used in order to get less of harmonic content and to obtain a near sinusoidal output voltage [18].