Faculty of Engineering

DEVELOPMENT OF NEW GENERATION OF FIELD VANE SHEAR TEST

BEATRICE BUCKING

Bachelor of Engineering with Honours

(Civil Engineering)

2017

UNIVERSITI MALAYSIA SARAWAK

Grade: _____

Please tick (√)

Final Year Project Report ☑

Masters ☐

PhD ☐

DECLARATION OF ORIGINAL WORK

This declaration is made on the ....11....day of..JULY.....2017.

Student's Declaration:

I ---BEATRICE BUCKING (40712)---

(PLEASE INDICATE STUDENT'S NAME, MATRIC NO. AND FACULTY) hereby declare that the work entitled DEVELOPMENT OF NEW GENERATION OF FIELD VANE SHEAR TEST is my original work. I have not copied from any other students' work or from any other sources except where due reference or acknowledgement is made explicitly in the text, nor has any part been written for me by another person.

11.7.17
Date submitted

BEATRICE BUCKING (40712)
Name of the student (Matric No.)

Supervisor's Declaration:

I DR. ALSIDQI HASAN (SUPERVISOR'S NAME) hereby certifies that the work entitled DEVELOPMENT OF NEW GENERATION OF FIELD VANE SHEAR TEST (TITLE) was prepared by the above named student, and was submitted to the "FACULTY" as a * partial/full fulfilment for the conferment of BACHELOR OF ENGINEERING (HONS) IN CIVIL ENGINEERING (PLEASE INDICATE THE DEGREE), and the aforementioned work, to the best of my knowledge, is the said student's work.

Received for examination by: Dr. Alsidqi Hasan
(Name of the supervisor)

Date: 11/7/2017

I declare that Project/Thesis is classified as (Please tick (√)):

☐ **CONFIDENTIAL** (Contains confidential information under the Official Secret Act 1972)*
☐ **RESTRICTED** (Contains restricted information as specified by the organisation where research was done)*
☑ **OPEN ACCESS**

Validation of Project/Thesis

I therefore duly affirmed with free consent and willingness declare that this said Project/Thesis shall be placed officially in the Centre for Academic Information Services with the abiding interest and rights as follows:

- This Project/Thesis is the sole legal property of Universiti Malaysia Sarawak (UNIMAS).
- The Centre for Academic Information Services has the lawful right to make copies for the purpose of academic and research only and not for other purpose.
- The Centre for Academic Information Services has the lawful right to digitalise the content for the Local Content Database.
- The Centre for Academic Information Services has the lawful right to make copies of the Project/Thesis for academic exchange between Higher Learning Institute.
- No dispute or any claim shall arise from the student itself neither third party on this Project/Thesis once it becomes the sole property of UNIMAS.
- This Project/Thesis or any material, data and information related to it shall not be distributed, published or disclosed to any party by the student except with UNIMAS permission.

Student signature _____ 11.7.17 (Date)

Supervisor signature: _____ 11/7/2017 (Date)

Current Address:
RUMAH MELINTANG, SUNGAI GAAT, 96300 KAPIT, SARAWAK.

Notes: * If the Project/Thesis is **CONFIDENTIAL** or **RESTRICTED**, please attach together as annexure a letter from the organisation with the period and reasons of confidentiality and restriction.

[The instrument is duly prepared by The Centre for Academic Information Services]

DEVELOPMENT OF NEW GENERATION OF FIELD VANE SHEAR TEST

BEATRICE BUCKING

A dissertation submitted in partial fulfillment

of the requirement for the degree of

Bachelor of Engineering with Honours

(Civil Engineering)

Faculty of Engineering

Universiti Malaysia Sarawak

2017

Dedicated to myself, my beloved parents, lecturers and friends

ACKNOWLEDGEMENT

First of all, I would like to thank God for bestowing me the patience, wisdom and guidance in a period of my undergraduate learning process, especially during the final year. I also would like to express my sincerest appreciation to my supervisor, Dr. Alsidqi Hasan for all the knowledge and guidance in this project.

Other than that, I would like to thank the Mechanical Department technicians' team for their kind hearted and willing to help in fabricating the apparatus of this project. Without their help, this project would not be completed.

Lastly, I would like to show my gratitude to my family, lecturers and friends for the never ending moral support and motivation during the completion of this project. Thanks are extended to those who believe that I would successfully complete this project.

ABSTRACT

Vane shear test is a very popular test that has been used worldwide to determine the undrained shear strength of soft soil especially clay. It is due to its simplicity and economical testing method as well as its availability both in laboratory and field. However, due to its less reliable data, the popularity had been overpowered by other tests. Therefore, many attempts had been made to improve the quality of vane shear test and the accuracy of its data. Hence, with the objective to upgrade and improve the interpretation of the data, a new generation of field vane shear test had been developed. The test is specialized to determine the undrained shear strength of soft clay and pore water pressure measurement is expected to indicate the appropriate rate of rotation in determining the undrained shear strength of soil. Torque cell, pressure transducer and automatic data acquisition is introduced in the application. Furthermore, friction between the torque shaft and soil is reduced by applying pushing shaft as an outer casing of the rod.

Key words: Vane shear, undrained shear strength, soft soil, pore water pressure, rate of rotation, torque cell, pressure transducer, automatic data acquisition

ABSTRAK

Ujian ricih ram adalah ujian yang sangat popular yang telah digunakan di seluruh dunia untuk menentukan kekuatan ricih taktersalir tanah lembut terutamanya tanah liat. Ia adalah disebabkan oleh kesederhanaan dan kaedah ujiannya yang ekonomi serta mudah dijalankan di makmal dan luar makmal (lapangan). Walau bagaimanapun, disebabkan oleh data yang kurang relevan, popularitinya yang telah didominasi oleh ujian lain. Oleh itu, banyak percubaan telah dilakukan untuk meningkatkan kualiti ujian ram ricih dan ketepatan data. Yakni, dengan matlamat untuk menaik taraf dan meningkatkan tafsiran data, ujian ricih bidang ram generasi baru telah dibangunkan. Ujian ini adalah khusus untuk menentukan kekuatan ricih taktersalir tanah liat lembut dan pengukuran tekanan air yang terdapat di liang tanah liat dijangka menunjukkan kadar putaran yang sesuai dalam menentukan kekuatan ricih taktersalir tanah. Sel tork, tekanan transduser dan pengambilalihan data automatik telah diperkenalkan dalam aplikasi ini. Tambahan pula, geseran antara shaf tork dan tanah telah dikurangkan dengan menggunakan shaf penolak sebagai sarung luar shaf tork.

TABLE OF CONTENTS

LIST OF TABLES

LIST OF FIGURES

LIST OF SYMBOLS

S_u	=	Undrained shear strength
°	=	Degree
t_{fF}	=	Time failure in field
μ	=	Correction factor
T	=	Torque
D	=	Distance
H	=	Height
π	=	Pi
u	=	Pore water pressure
u_o	=	Initial pore water pressure
u_f	=	Final pore water pressure
mm	=	Millimeter
cm	=	Centimeter
m	=	Meter
%	=	Percentage

LIST OF ABBREVIATIONS

BS	=	British Standard
ASTM	=	American Society for Testing and Meterials
IS	=	Indian Standard
CPTU	=	Piezo Cone Penetration Testing
SGI	=	Swedish Geotechnical Institution
NTNU	=	Norwegian University of Science and Technology
MIG	=	Metal Inert Gas
AASTHO	=	The American Association of State Highway
USCS	=	Unified Soil Classification System

CHAPTER 1

INTRODUCTION

1.1 Background

The properties of soil must be determined through tests before construction work begins and suitable measures can be made based on the results. Soil properties such as soil strength are essential and the most popular test to determine the strength of soil is vane shear test.

Vane shear test is a test that is used to determine the undrained shear strength (S_u) of soil especially saturated clay with S_u less than 100kPa (Knappett & Craig, 2012). The test is suitable for other soft soil such as mud, peat and slurry. However, it is not suitable for coarse-grained soil. Construction site that consist of soft soil would used this test to determine the shear strength of the soil.

Figure 1.1.1: Traditional vane shear apparatus

Fig. 1.1.1 shows the traditional field vane shear that was currently used to determine the undrained shear strength of the soil. The vane is pushed into the soil to the required depth where the undisturbed soil is hard to get. According to BS 1377-7:1990, torque is applied to the vane by rotating the torsion head at the rate of 6°/min to 12°/min, until the soil failed in shear. The maximum angular deflection of torsion spring and angle of rotation of vane at instant failure needed to de recorded. Based on the data, the rate of shear can be determined and the value of the undrained shear strength can be obtained.

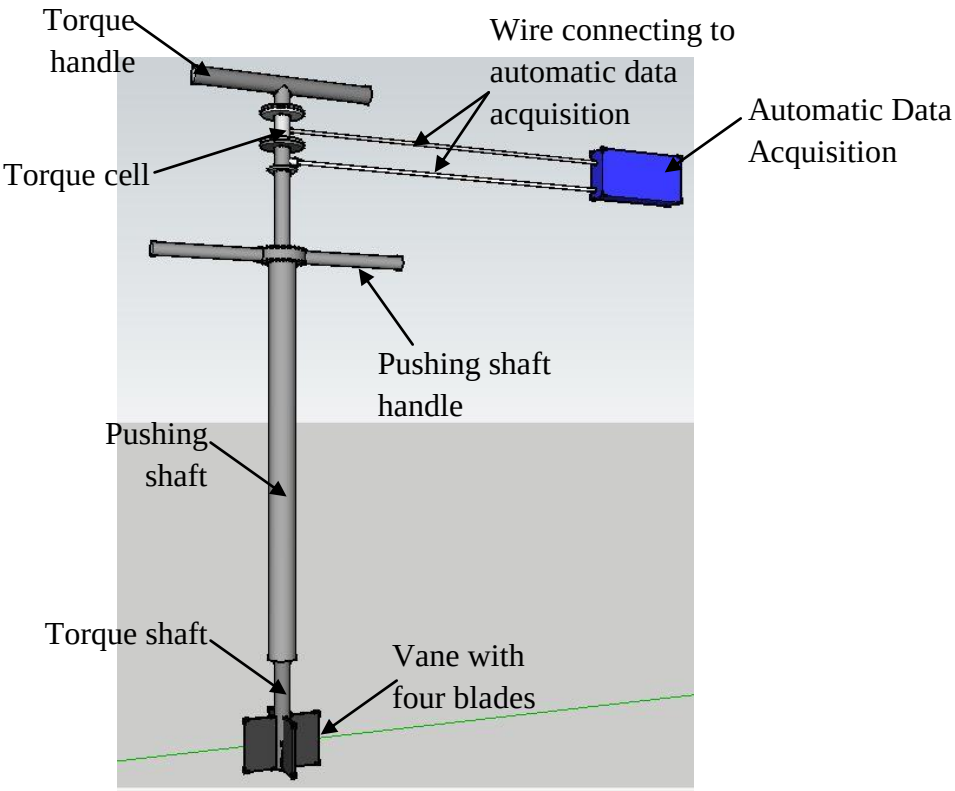

Figure 1.1.2: New generation of field vane shear test

This project introduces the new generation of field vane shear test as shown in Fig. 1.1.2 where the test will be conducted in real testing to determine the in-situ undrained shear strength of the soil and pore water pressure measurement. The new field vane shear test apparatus is an improvement of the traditional vane shear as the pore water pressure measurement is expected to indicate the appropriate rate of rotation. The new generation of field vane shear introduced the application of torque cell, pressure transducer and automatic data acquisition system. Torque cell is used to determine the undrained shear strength of the soil and pressure transducer is used to determine the

pore water pressure of the soil. Mean while, the automatic data acquisition is connected to computer where the results from the test will be acquired.

1.2 Problem Statement

There is no appropriate measurement to determine the rate of rotation of shear for undrained shear strength. Without any appropriate indicator, undrained shear strength can be overestimated which is very dangerous and will affect the accuracy of the result. Moreover, the shaft resistance is neglected due to pushing shaft acted as a protection case for the torque shaft when penetrated into the soil.

1.3 Project Aim and Objectives

This project focuses on fabrication of field vane shear test equipment which can be brought to the site for in-situ testing. The aim will be derived into the following objectives:

- To develop a new generation of field vane shear test equipment, including the fabrication.
- To prove the concept of the equipment in real testing.

1.4 Significant of Study

Based on the problem statement, it is important to have an appropriate indicator to determine the rate of shear rotation to avoid overestimated undrained shear strength. Overestimated undrained shear strength is extremely dangerous since it can majorly affect the result. This is due to shear strength influenced by rate of shear which is dependent to water content in soil. The friction between the rod and soil is reduced during penetration into soil by applying the outer steel as a protection case. The steel case is penetrated along with the rod that connected with the vane and after that the rod will be pushed deeper into the soil. This is to avoid torque measurement that is included with false component of resistance.

1.5 Scope of Work

The study is limited to the production of a prototype of the new generation of vane shear when limited resources available. The prototype will then be tested in real testing with soft clay soil.

1.6 Thesis Outline

This project report consists of five chapters all together. Chapter 1 describes the introduction of the project which includes project background, problem statement, project aim, objectives, significant of study, and scope of work.

Chapter 2 elaborates the extraction of literature review of previous study on vane shear test performed by several researchers.

Chapter 3 explains the methodology to fabricate the new generation of field vane shear test apparatus and its workability through field test. The fabrication involves cutting, lathing, drilling and welding.

Chapter 4 covers the results and discussion based on the concept of the new apparatus, the challenges encountered during the fabrication process and also the testing protocol using the new apparatus.

Chapter 5 summarizes the conclusion of the project and recommendations for the future works of the report.

1.7 Gantt Chart

Table 1.7.1 show the working schedule of Final Year Project 1 and Final Year Project 2 which the duration of working is more on the fabrication of the new generation of field vane shear test equipment.

Final Year Project (FYP) 1														
EVENT/WEEK	**1**	**2**	**3**	**4**	**5**	**6**	**7**	**8**	**9**	**10**	**11**	**12**	**13**	**14**
Submitting Permission Form														
Permission form to use Mechanical														
Department Workshop														
Material Preparation														
Stainless Steel														
Hollow cylinder														
Solid cylinder														
Flat														
Equipment Fabrication														
Cutting														
Lathing														

Drilling														
Welding														
Final Year Project Report														
Chapter 1: Introduction														
Chapter 2: Literature Review														
Chapter 3: Methodology														
Final Year Project (FYP) 2														
Material Preparation														
Stainless Steel														
Hollow cylinder														
Solid cylinder														
Flat														
Equipment Fabrication														
Cutting														
Lathing														
Drilling														
Welding														
Vane Shear Test														
Final Year Project Report														
Chapter 1: Introduction														
Chapter 2: Literature Review														
Chapter 3: Methodology														
Chapter 4: Result and														
Discussion														
Chapter 5: Conclusion														

Table 1.7.1: Work schedule for FYP 1 and FYP 2

CHAPTER 2

LITERATURE REVIEW

2.1 General

This literature review presents the recent finding and study of the development of vane shear test including its history.

2.2 Vane Shear Test

Vane shear test first develop in 20th century where John Olsson constructed field vane shear equipment with two blades in1919 (Messerklinger, Zumsteg, & Puzrin, 2011). Even in the early period, the rate of the rotation was an important issue. In 1929, the knowledge of vane shear test extended to Germany. After that, six blades field vane shear test equipment was introduced in 1941 constructed by McLaughlin to study the sub-soil properties at Welland Canal site and also to study the slides along Beauharnois Canal (Lea & Benedict, 1953). Three years after that, British army was introduced to vane shear test to determine the usability of road for military vehicles (Smith, 1945). Final version of field vane shear equipment of four-bladed is the one kind that currently exists today designed by Lyman Carlsson in 1948 in Norway (Cadling & Odenstad, 1950). Following that, the usage of vane shear test in Norway had been well known as in-situ test device from sixties to the eighties (Gylland, Thakur, & Emdal, 2016).

According to ASTM D2573-72 (1978), traditional field vane shear test consist of placing the four-bladed vane into the undisturbed soil and then rotating it from the surface to determine the maximum torque force required for the soil to be sheared. The torque must be at fixed elevation during the rotation and the rate should not more than 6°/min. Vane rod and instrument friction needed to take into account by conducting rod friction test on site. It is to avoid the friction to be recorded as soil friction. After the maximum torque is determined, the vane is rotated at least 10 revolutions; the determination of remoulded strength which is started within a minute after remoulding process. ASTM had illustrated the four-bladed vane as shown in Fig. 2.2.1.

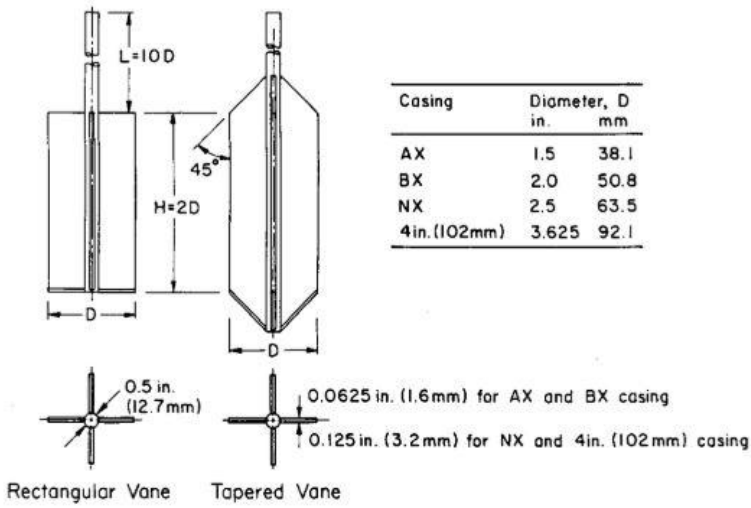

Casing	Diameter, D in.	mm
AX	1.5	38.1
BX	2.0	50.8
NX	2.5	63.5
4in.(102mm)	3.625	92.1

Figure 2.2.1: Geometry of four-bladed vane [ASTM D2573-72(1978)]

Indian standard (IS 4434-1978) stated that there were two types of method for field vane shear test; test from the bottom of the bore hole and test by direct penetration from the ground surface. The difference between the tests is the apparatus used. The diagrams of the apparatus for both methods are shown in Fig. 2.2.2 and 2.2.3.

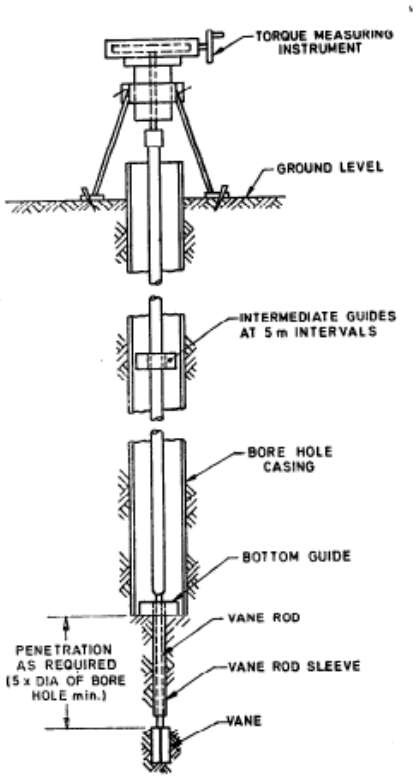

Figure 2.2.2: Apparatus arrangement for Test from Bottom of Bore Hole (IS 4434-1978)

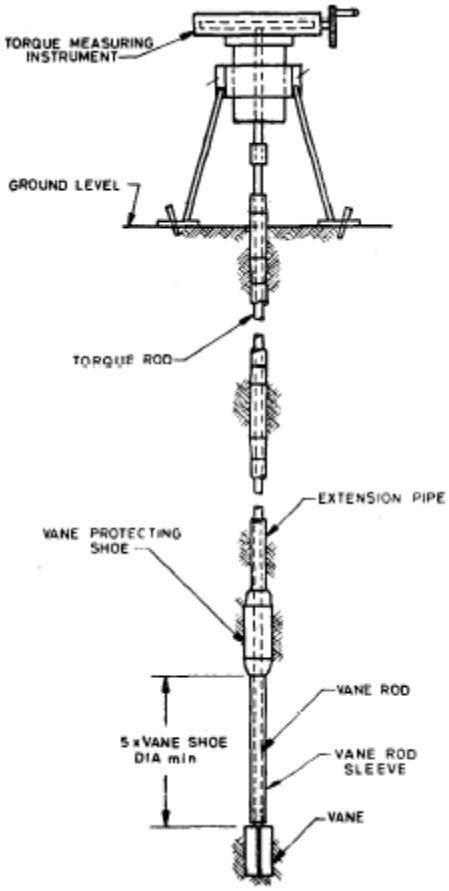

Figure 2.2.3: Apparatus arrangement for Test by Direct Penetration from Ground Surface (IS 4434-1978)

Vane shear test is developed due to the difficulties experienced by geotechnical engineers to determine the undrained shear strength of soft soil such as clay. However, the uncertainties due to interpretation of vane shear test made the popularity of vane shear test declined while the popularity of CPTU-test; cone penetration test which gathers peizometer data increased (Gylland, Thakur, & Emdal, 2016). According to Matsui and Abe (1981), a symposium of vane shear test was held in Japan regarding the determination of standard of the test procedure. Vane shear test apparatus consists of four blades attached to a cylindrical vane which is then inserted into the soil and torque is applied to determine the rate of rotation.

Vane shear test is widely used due to its simplicity, speed and relative cost. Moreover, it is the only method that is available both in laboratory and field (Schlue, Moerz, & Kreiter, 2010). However, there are factors that affecting the results of the test such as shear rate, strength anisotrophy and road frictions affect. Apart from that, frictions between rod and soil, poor calibration of torque and uneven torque rotation are

also sources of error in result (Kulhawy, et al., 1983). Time failure in field, t_{fF} of clay soil in vane shear test is longer which is typically been assumed to be several weeks or month, therefore Bjerrum had proposed a correction factor μ for the undrained shear strength (Bjerrum, 1972 and 1973). t_{fF} is assumed to be influenced by the plasticity and consistency of soil.

Despite the uncertainties of the vane shear test results, the evolution of vane shear continue until nowadays. Walker (1983) stated that there were two vane borers that can be used for vane shear test; Swedish Geotechnical Institute (SGI) device and Nilcon device as shown in Fig. 2.2.4 and 2.2.5 respectively. SGI borer rod is surrounded by sleeve to reduce the friction loss and covered with shoe for protection purposed during penetration while Nilcon borer does not consist of any protection (Walker, 1983). However, Nilcon consist of slip coupling that provides calibration for rod friction before each test. On 1993, Morris and Williams had developed a new model of vane shear strength testing in soil. It was a theoretical model developed using experimental data on total and efficient stresses acting within shearing zone surrounding rotating shear vane (Morris & Williams, 1993).

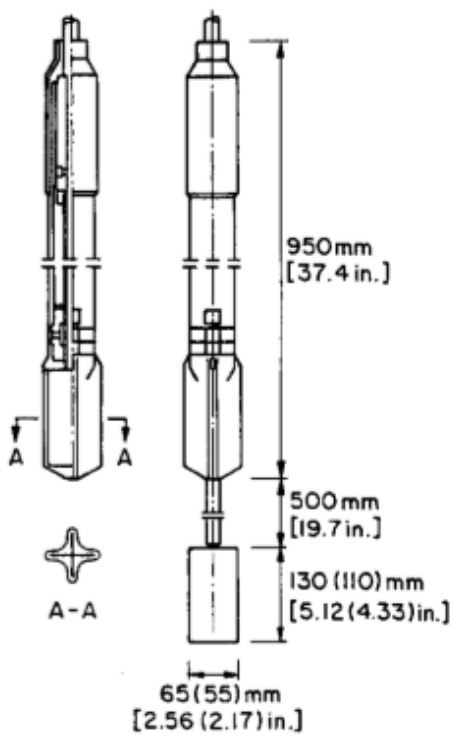

Figure 2.2.4: SGI vane borer (Walker, 1983)