ANALOG TRANSMISSIONS BASED ON 16 QUADRATURE AMPLITUDE MODULATION

NORJIHAN BT. YAHYA

Universiti Malaysia Sarawak
2000

Borang Penyerahan Tesis
Universiti Malaysia Sarawak

R13a

BORANG PENYERAHAN TESIS

Judul: **ANALOG TRANSMISSIONS BASED ON 16 QUADRATURE AMPLITUDE MODULATION**

SESI PENGAJIAN: 1997/2000

Saya **NORJIHAN BINTI YAHYA**

mengaku membenarkan tesis ini disimpan di Pusat Khidmat Maklumat Akademik, Universiti Malaysia Sarawak dengan syarat-syarat kegunaan seperti berikut:

1. Hakmilik kertas projek adalah di bawah nama penulis melainkan penulisan sebagai projek bersama dan dibiayai oleh UNIMAS, hakmiliknya adalah kepunyaan UNIMAS.
2. Naskhah salinan di dalam bentuk kertas atau mikro hanya boleh dibuat dengan kebenaran bertulis daripada penulis.
3. Pusat Khidmat Maklumat Akademik, UNIMAS dibenarkan membuat salinan untuk pengajian mereka.
4. Kertas projek hanya boleh diterbitkan dengan kebenaran penulis. Bayaran royalti adalah mengikut kadar yang dipersetujui kelak.
5. * Saya membenarkan/tidak membenarkan Perpustakaan membuat salinan kertas projek ini sebagai bahan pertukaran di antara institusi pengajian tinggi.
6. ** Sila tandakan (✓)

[ ]	SULIT	(Mengandungi maklumat yang berdarjah keselamatan atau kepentingan Malaysia seperti yang termaktub di dalam AKTA RAHSIA RASMI 1972).
[ ]	TERHAD	(Mengandungi maklumat TERHAD yang telah ditentukan oleh organisasi/ badan di mana penyelidikan dijalankan).
[✓]	TIDAK TERHAD	

Disahkan oleh

(TANDATANGAN PENULIS) (TANDATANGAN PENYELIA)

Alamat tetap: No. 25 Kampung Ulu Mahang,
095(ahang, Kulim,
Kedah Darulaman

Pn. Sakena bt. Abd. Jabar
Nama Penyelia

Tarikh: 27 MARCH 2000 Tarikh:

CATATAN
* Potong yang tidak berkenaan.
* Jika Kertas Projek ini SULIT atau TERHAD, sila lampirkan surat daripada pihak berkuasa/
* organisasi berkenaan dengan menyertakan sekali tempoh kertas projek. Ini perlu dikelaskan sebagai SULIT atau TERHAD.

SUPERVISOR'S CERTIFICATION

This project report attached here to entitled " **ANALOG TRANSMISSIONS BASED ON 16 QUADRATRE APLITUDE MODULATION** ". Prepared and submitted by Norjihan bt. Yahya as a partial fulfillment of the requirement for the degree of Bachelor of Engineering with Honours in Electronics and Telecommunications is hereby read and approved by:

_____ _____

Mrs. Sakena bt. Abd. Jabar Date

Supervisor

ANALOG TRANSMISSIONS BASED ON 16 QUADRATURE AMPLITUDE MODULATION

NORJIHAN BT. YAHYA

Tesis Dikemukakan Kepada

Fakulti Kejuruteraan, Universiti Malaysia Sarawak

Sebagai Memenuhi Sebahagian daripada Syarat

Penganugerahan Sarjana Muda Kejuruteraan

Dengan Kepujian Kejuruteraan Elektronik dan Telekomunikasi

2000

Dedicated especially to my beloved parents, Hj. Yahya b. Ibrahim & Hjh. Che Dah bt. Hj Mat Aris and the rest of the family

ACKNOWLEDGEMENT

First and foremost, I would like to convey my gratitude to my supervisor Pn. Sakena bt. Abd. Jabar for her advice, encouragement and guidance throughout the course of this thesis.

Special thanks to Prof. Madya Dr. Mohamad Kadim Suaidi, Dean of Faculty of Engineering, Mr. Ng Liang Yew, Core Group Head, Mr. Wan Abu Bakar Ngah and Mr. Zakaria Idris, Lab Assistants, Miss Licha Mued, Tutor PKET, all lecturers and staffs of Faculty of Engineering for their guidance, help and support.

Here, I also want to thanks my parents, the whole family, friends and coursemates and especially to Mr. Razif b. Razali for their support in terms of concerned and encouragement.

ABSTRACT

Nowadays, in Malaysia Quadrature Amplitude Modulation (QAM) is a new technique that can be explored in telecommunication. In data communication links, quadrature amplitude modulation is the famous method, which has a bandwidth efficient modulation technique. QAM is the form of digital modulation and it is used to achieve high data in the limited bandwidth channels. Many applications of QAM such as 16 QAM is used in microwave digital radio, modems, and other small digital communication systems. 32 QAM is used in terrestrial microwave systems. 64 QAM are used in modems, MMDS, and other broadband communication systems. 256 QAM are used in digital video mostly in the USA, and are also used in high-speed modems.

The first chapter covered the introductions and history of telecommunications. The objectives and project overview also discussed in this chapter.

The second chapter briefly explained the literature review about the fundamental of communication links included Analog to Digital Converter ADC), Quadrature Amplitude Modulation (QAM), Subcarrier Modulation (SCM) and laser.

The explanations of basic hardware components are briefly mentioned in third chapter.

Chapter four covered the circuit design and testing the hardware part. The testing result and simulation is including there.

The last chapter gave the brief conclusions and recommendation of QAM and the problems faced during the writer done this project.

ABSTRAK

Kini, teknik *Quadrature Amplitude Modulation* (QAM) merupakan satu teknik baru yang perlu di kaji dan dikuasai dalam sistem telekomunikasi di Malaysia. QAM merupakan satu teknik yang popular dalam komunikasi data kerana ia mempunyai lebarjalur efisien dalam teknik modulasi. QAM adalah satu bentuk modulasi digital bagi mencapai nilai data tertinggi dalam saluran lebarjalur yang terhad. QAM dapat diapliksikan dalam banyak keadaan seperti 16 QAM digunakan dalam sistem radio gelombang mikro, modem dan sistem komunikasi digital yang lain. 32 QAM digunakan dalam sistem gelombang mikro yang berkenaan dengan bumi manakala 64 QAM diaplikasikan dalam modem, MMDS dan sistem komunikasi yang lain. 256 QAM kebanyakkannya telah digunakan dalam video digital di USA.

Bab satu menerangkan tentang pengenalan dan sejarah sistem telekomunikasi. Matlamat dan gambaran keseluruhan mengenai projek ini juga dinyatakan dalam bab ini.

Bab dua menyentuh tentang pengenalan ringkas bagi asas sistem komunikasi termasuk penukaran analog kepada digital, *Quadrature Amplitude Modulation (QAM), SubcarrierMultiplexing (SCM)* dan laser.

Penerangan secara ringkas tentang beberapa asas komponen yang digunakan terdapat dalam bab tiga.

Bab empat mengutarakan gambarajah litar yang digunakan dalam menjalankan eksperimen dan keputusan eksperimen dan simulasi.

Manakala, bab terakhir menyentuh tentang kesimpulan bagi keputusan yang diperolehi dan masalah yang dihadapi semasa melakukan eksperimen ini.

CONTENTS

LIST OF TABLES

LIST OF FIGURES

CHAPTER 1

INTRODUCTION

Generally, the main objective of any communication system is to transfer the information effectively and successfully from one point to another point. Information can be transferred using several medium such as air, cables, satellite or fiber optic. An optical fiber can handle enormous amount of information compared to copper cable for transmitting across the country or even around the world. It can cover large of communication areas. Nowadays, the optical fiber becomes the most popular of choosing for transmitting information between and within building especially to support the multimedia worldwide.

1.1 OPTICAL COMMUNICATION SYSTEMS

Optical communication system has a different frequency range of the carrier waves used to carry the information compared to the other communication systems. Normally optical communication systems have larger carrier frequency (~100THz) than microwaves carrier frequency (~1-10GHz). Therefore, optical communication system was expected to increase the information capacity because of the larger amount of frequency carrier (~10,000 more than microwaves frequency). Optical communication systems can be classified into two broad categories: *unguided* and

guided.

In the case of unguided optical communication systems the optical beam emitted by the transmitter spreads in space similar to radio waves or microwaves and the guided lightwave system achieved using optical fiber and usually called fiber optic communication systems.

However, mostly fiber optic communication systems have been developed mostly for their application in their field of telecommunications. The telecommunication applications can be broadly classified into two categories called *long-houl* and *short-houl*. This is depending on the whether the optical signal is transmitted over relatively long or short distances compared with typical intercity distances.

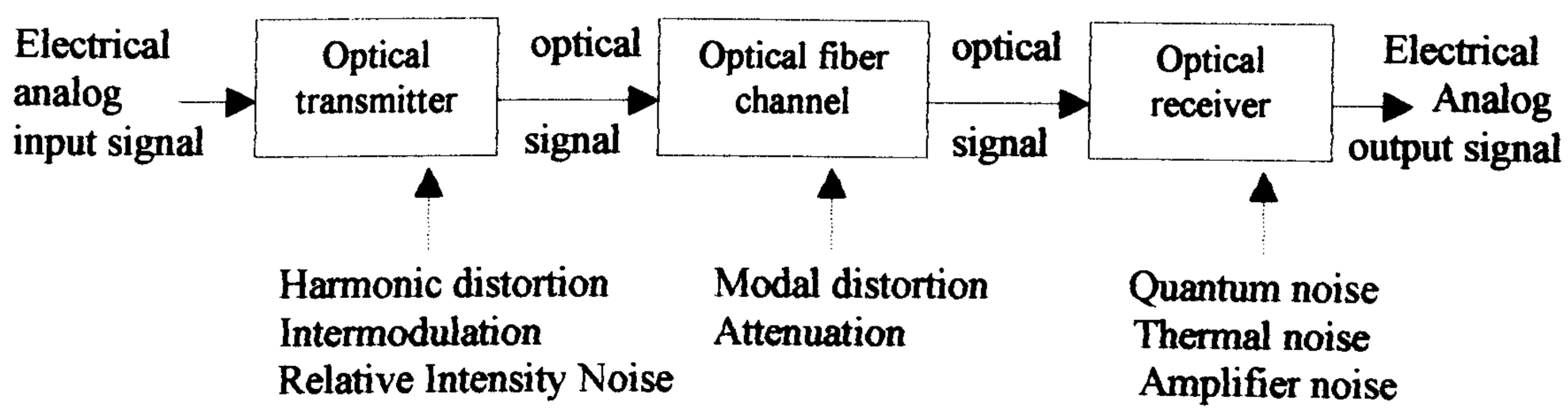

Figure 1.1: Fundamental elements of an analog link and the major noise contributors [2].

Figure 1.1 shows the block diagram of the fundamental elements of an analog link and the major noise contributors. The three elements which common to all communication systems. It consists of an optical transmitter, optical fiber channel and optical receiver. This information (electrical analog input signal) transfer is accomplish most often by first modulate (superimposed) the information into an

optical signal as a carrier. Then, the modulated carrier is transmitted over an optical channel to the right destination. The carrier signal is received by the receiver and demodulated onto the original signal. During implemented this method, several things should be considered to *nonlinearities* in the optical source. There are including *harmonic distortions, intermodulation products and relative intensity noise (RIN)* in the laser. In fiber optic element, the frequency dependence of the amplitude, phase and group delay which it should have a flat amplitude and group delay response within the passband required to send the signal free of linear distortion. In addition, another important thing that should be considered is attenuation along transmitting the optical signal from the optical transmitter to the optical receiver. Noise performance is the primary issue of concern in the receiver. The principles noise sources are quantum and thermal noise in the photodiode and amplifier noises in the electronics receiver. In an optical communication system, the carrier is selected from the optical regions, which includes infrared, visible and ultraviolet frequencies.

1.2 HISTORY OF COMMUNICATIONS

In the 18th century, the basic communication occurred when the fire and smoke signal used to convey a single piece of information such as to denote the victory in a war [1]. There are another ideas for communication such as signaling lamp and flags. In 1792, Claude Chappe suggested to transmit mechanical coded messages over long distance by the use of intermediate relay stations acting as regenerators and repeaters [1]. The role of light was simply to make the coded signals visible so that they could be intercepted by the relay station.

The era of electrical communications began in the 1838, when the advent of telegraph by Samuel F. B Morse replaced the used of the light to electricity. After that, the telegraph cable went into operation in 1844. In that time wire cables are only the medium in electrical communication. Wire cables have been used continuously until 1887, when Heinrich Hertz introduced long-wavelength electromagnetic radiation. In year 1895, Guglielmo Marconi was implemented this as the first trial by using the radio demonstration. Now, the use of optical fiber replaced the function of the copper media for handling the enormous amounts of information that must be transmitted to the exact destination.

The principles of guided light transmission were known in the nineteenth century. John Tyndall demonstrated this principles in 1870 before the British Royal Society [4]. He showed that light was conducted in a curved path along an illuminated stream of water flowing from a hole in a tank. The result of his experiment illustrated the concept of total internal reflection, wherein light rays propagate by reflection off the boundaries of a medium escape primarily at the opposite end of the conductor. The research in this field was continuously when Alexander Graham Bell studied the possibility of transmitting speech on a beam of light to a device called photophone [4]. The study of transmission by optical waves was continued until 1930s. An extensive investigation of cladded fiber waveguides was accomplished in the 1960s. During this period, attention was focused on reducing the losses. By 1970, the attenuation was reduced to as low as 3 dB/km whereas 1000 dB/km when the fiber was on first order. The next area of research by fiber manufacturers centered on reducing the dispersion characteristics of the fiber [4].

1.3 OBJECTIVES

The main objective of this project is to develop the preamplifier, analog to digital converter and transmitter for analog transmission based on 16 Quadrature Amplitude Modulation (QAM). The result should get in spectrum signals of 16 QAM constellation pattern.

Firstly, the sine wave signal will be amplified through the preamplifier circuit. Secondly, the boosted signal is fed to the analog to digital converter circuit for signal changes from analog to digital. Lastly, the digital output result will be send to 16 QAM transmitter circuit.

1.4 PROJECT OVERVIEW

The basic operation of this project is that the analog signals are amplified through the preamplifier. Then, it is first convert from analog signal to the digital form using the analog to digital converter. This is because digital signals have several advantages compared to analog signals. Then, the digital signals are then modulated using 16 Quadrature Amplitude Modulation (16 QAM) to put the information onto a high frequency carrier for transmission. 16 QAM is used because it is the most popular method used to achieve high data rates in the limited bandwidth channels for data communication links. The modulated signals mixed together with the local oscillator frequency conducted by using the subcarrier multiplexing (SCM). These signals are multiplexed for the simultaneous transmission of two or more signals (multichannel) onto one carrier. SCM has capability to transmit both digital and analog signal simultaneously. The result produced from SCM is used to drive the

laser diode. Laser diode takes part as optical sources. Therefore, harmonic distortion always occurs when generating an optical source. The harmonic distortion was measured to get the optical signal quality.

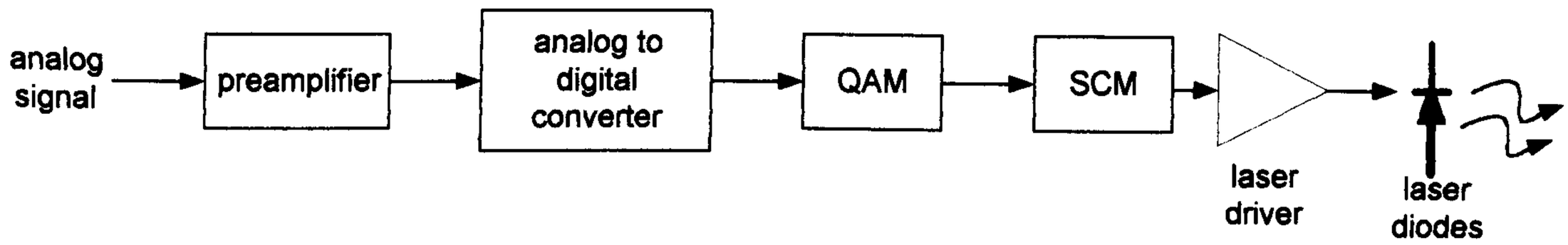

Figure 1.2: The basic structure of analog transmission based on subcarrier multiplexing.

CHAPTER 2

LITERATURE REVIEW

2.1 ANALOG TRANSMISSIONS

Information can be transmitted from one place to another, whether separated by a few distance or transoceanic distance using a communication system. Generally in any communication system, information to be transmitted is available in the form of an electric signal. An electric signal may takes two forms which are analog and digital signal. Analog signal has variable quantity of information that varies continuously with time. The examples of analog signal are audio and video signals resulting when the microphone or video camera converts the voice or image into a continuously varying electrical signal. Whereas the digital signal has two discrete values typically represented by a binary 1 and 0 as a function of time.

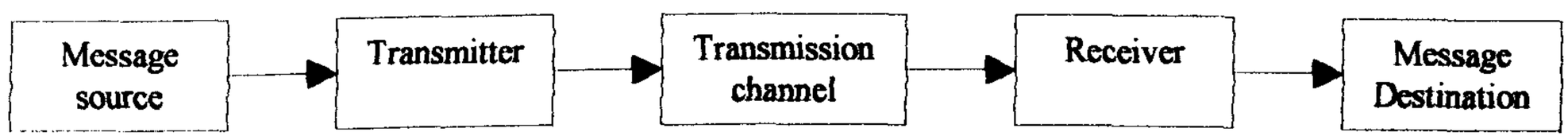

Figure 2.1: Fundamental elements of a communication system

Figure 2.1 shows the fundamental elements of a communication system. There are consists of message source as an input that transmitted over the transmission channel by using the transmitter. It will received by the receiver and send it to the message destination. The message or signal can be transmit over the transmission medium such as fiber-optic cable, twisted-wire pair, coaxial cable, satellite communication, dielectric-slab waveguide, water, and air. Although, free space can also be considered a transmission medium for electromagnetic waves, but it is not a material medium.

We can see that the trend in telecommunications has been a gradual conversion from analog to digital. In spite of the general trend toward, digital transmission of an analog signal because there is a significant amount of analog signal transmission. Actually there are more advantages to transmit the information in analog form instead of converting it into digital format. Analog signal can be converted into digital signal by sampling and quantizing the signal amplitude. Once an analog signal has been converted to digital form, the digital signal encoded and transmitted through a communication channel. The communication channel is a system that can produce the output when excited by an input signal. The several significant advantages using digital format are low noise level, long span length, transmission unaffected by weather, resistance to interference, consistent performance with high reliability and advanced networking which allows for mixing voice, data and video transparency at the network level.

However, analog transmission can implement in an analog fiber optic system. There are three main parameters need to be considered as a carrier to noise ratio, bandwidth and signal distortion that resulting from non-linearities loads. Since

the information signal is usually superimposed on a radio frequency carrier (RF), the carrier to noise ratio is used instead of a signal to noise ratio analysis. In optical fiber, information signal can be transmitted over a single channel or multiple signals over the same channel. If a single channel is used, information signal is directly modulated onto optical carrier. Whereas for transmitting multiple signals over the same channel, one can used the subcarrier multiplexing technique. A limiting factor in using optical systems is the noises arising from harmonic and intermodulation distortions.

2.1.1 MULTICHANNEL COMMUNICATION SYSTEMS

Most fiber optic communication system have the rate capability of transmitting at range more than 100 Mb/s. In order to utilize the system capacity fully, it is necessary to transmit many channels (multichannel) simultaneously through multiplexing. The design of multichannel communication systems requires a careful consideration of many transmitter and receiver characteristics. The most important issue that we need to give full attention is the stability of the carrier frequency or wavelength associated with each channel.

The emission frequencies of laser diode can change considerable with time. This is because the changes in operating conditions such as temperature can change the emission frequency. Generally, in single channel communication systems, the change of frequency is not really concern. It is important when implementing multichannel systems. In other words, the carrier frequency of each channel remains stable, so the channel spacing does not fluctuate with time. Another issue in designing multichannel communication system is related to distribution losses. Normally, when

a large number of channels are broadcasted by using optical bus, the channel power will become smaller. This is because of the distribution and coupling losses. Otherwise, to solve this problem, it needs to use the optical amplifier. And, because of a relatively large bandwidth of fiber amplifiers, many channels can be amplified simultaneously using optical amplifier.

2.2 ANALOG TO DIGITAL CONVERTER (ADC)

Actually, the analog to digital converter performs a reverse function of the digital to analog converter. Analog to digital converter (ADC) is an electronic process in which a continuously variable analog signal in changed without altering its essential contact into multilevel (digital) signal. The input to an ADC consists of a voltage that varies among a theoretically infinite number of values. Examples are sine waves, the waveforms representing human speech and the signals from a conventional television camera. The output of ADC in contrast has defined level or states. The simplest digital signal has two states called binary. The whole numbers can be represented in binary form as string of ones and zeros. In a digital signal processing system, an ADC is required if the signal input is analog.

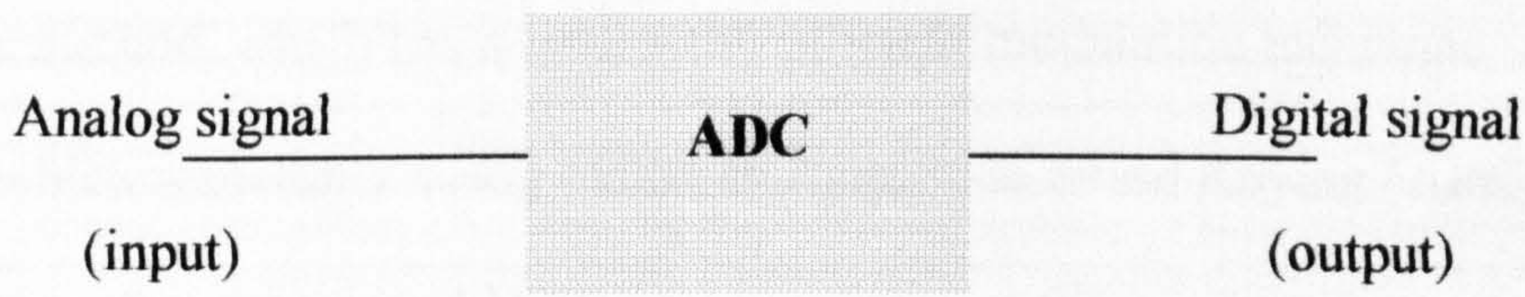

Figure 2.2: An analog to digital converter