UNIVERSITI MALAYSIA SARAWAK

UNIMAS

Faculty of Engineering

RADIO DETECTOR : *'SENSING'*

Rofina Ngau Tingang

Bachelor of Engineering with Honours
(Electronics and Telecommunication Engineering)
2004

UNIVERSITI MALAYSIA SARAWAK

R13a

BORANG PENGESAHAN STATUS TESIS

Judul: **RADIO DETECTOR : *'SENSING'***

SESI PENGAJIAN: 2003/2004

Saya **ROFINA NGAU TINGANG**
(HURUF BESAR)

mengaku membenarkan tesis * ini disimpan di Pusat Khidmat Maklumat Akademik, Universiti Malaysia Sarawak dengan syarat-syarat kegunaan seperti berikut:

1. Tesis adalah hakmilik Universiti Malaysia Sarawak.
2. Pusat Khidmat Maklumat Akademik, Universiti Malaysia Sarawak dibenarkan membuat salinan untuk tujuan pengajian sahaja.
3. Membuat pendigitan untuk membangunkan Pangkalan Data Kandungan Tempatan.
4. Pusat Khidmat Maklumat Akademik, Universiti Malaysia Sarawak dibenarkan membuat salinan tesis ini sebagai bahan pertukaran antara institusi pengajian tinggi.
5. ** Sila tandakan (✓) di kotak yang berkenaan

[ ]	SULIT	(Mengandungi maklumat yang berdarjah keselamatan atau kepentingan Malaysia seperti yang termaktub di dalam AKTA RAHSIA RASMI 1972).
[ ]	TERHAD	(Mengandungi maklumat TERHAD yang telah ditentukan oleh organisasi/ badan di mana penyelidikan dijalankan).
[√]	TIDAK TERHAD	

Disahkan oleh

(TANDATANGAN PENULIS)

(TANDATANGAN PENYELIA)

Alamat tetap: LOT 1447, RPR
TG. KIDURONG, 97007 BINTULU,
SARAWAK.

ENCIK MARTIN ANYI
Nama Penyelia

Tarikh: 15 APRIL 2004

Tarikh: 15 APRIL 2004

CATATAN

* Tesis dimaksudkan sebagai tesis bagi Ijazah Doktor Falsafah, Sarjana dan Sarjana Muda.

** Jika tesis ini SULIT atau TERHAD, sila lampirkan surat daripada pihak berkuasa/organisasi berkenaan dengan menyatakan sekali sebab dan tempoh tesis ini perlu dikelaskan sebagai SULIT dan TERHAD.

Laporan Projek Tahun Akhir berikut:

Tajuk: **RADIO DETECTOR : '*SENSING*'**

Nama Penulis: **Rofina Ngau Tingang**

Matrik: **5097**

telah dibaca dan disahkan oleh:

Encik Martin Anyi
Penyelia

15/4/2004
Tarikh

RADIO DETECTOR : '*SENSING*'

ROFINA NGAU TINGANG

This project is submitted in partial fulfilment of
the requirements for the degree of Bachelor of Engineering with Honours
(Electronics & Telecommunication Engineering)

Faculty of Engineering
UNIVERSITI MALAYSIA SARAWAK
2004

To my beloved parents, family, friends and Leay ...

ACKNOWLEDGEMENT

First of all, I would like to express my high gratitude to my supervisor Mr Martin Anyi, for his guidance and support. Without his encouragement and priceless advice, this project would be an extremely hard task for me.

I would like to take this opportunity to express sincere appreciation to those people who involve in completing this project directly or indirectly. Especially, for the Faculty of Engineering which provided the necessary facilities for this project, and also to the lecturers, tutors and lab assistances for their information, help and guidance.

Finally, thanks to my beloved family, Leay and to all my special friends, for their help and support in completing this project. Not to be forgotten my laboratory mate, Wan Faridawaty Bt Wan Yusof, who was gone through with me the hard time of preparing the thesis.

ABSTRACT

Generally, the project is designed to track the location, for example for a vehicle, at certain range. Beside that, the system developed must be able to predict the location of the vehicle. The idea is to put the transmitter somewhere in the vehicle for example in a car, and the receiver will sense and detect where the car location is. The further the distance, the lower the signal received at the receiver. The receiver to be built is a handheld receiver with an antenna. Using the Frequency Modulation (FM) technique, the FM Receiver which is operating at 88MHz until 108MHz, is designed for this project. FM Receiver is indeed an electronic project that places great emphasis on practical work. This project involves both the electronics and telecommunications fields, which also enhances one's practical skill. Theoretical knowledge such as principles of telecommunication and circuit theory learned from several courses is applied in the project.

ABSTRAK

Amnya, projek ini dicipta untuk mengesan kedudukan kenderaan misalnya, pada suatu jarak yang tertentu. Di samping itu, sistem tersebut haruslah dapat mengagak di mana lokasi kenderaan tersebut. Ideanya adalah dengan meletakkan pemancar di suatu kedudukan di dalam kenderaan contohnya kereta, dan penerima akan mengagak dan mengesan lokasi kereta tersebut. Semakin jauh jarak, semakin lemah isyarat yang diterima oleh penerima. Penerima yang hendak dibina adalah penerima yang mudah dibawa berserta dengan antena. Menggunakan teknik penyuaitalaan frekuensi (FM), penerima FM yang beroperasi pada frekuensi 88MHz hingga 108MHz, dicipta untuk projek ini. Penerima FM sesungguhnya sebuah projek elektronik yang menekankan kerja – kerja praktikal. Projek ini melibatkan kedua bidang elektronik dan telekomunikasi, yang juga boleh meningkatkan kemahiran seseorang. Pengetahuan teori contohnya dalam prinsip telekomunikasi dan teori litar yang dipelajari daripada beberapa kursus telah diaplikasikan di dalam projek ini.

3.1.5 Helical Antenna 22

CHAPTER 4 : PROJECT PLANNING

4.1 Project Overview. 24

4.2 FM Receiver 25

4.3 Antenna 27

CHAPTER 5 : HARDWARE DEVELOPMENT

5.1 General 31

5.2 The Circuit Idea 31

5.3 The Tuner 32

5.4 Schematic Circuit Drawing 33

5.5 Components Assembly 33

5.5.1 Planning and Layout 33

5.5.2 Design on Printed Circuit Board (PCB) 36

5.5.3 Etching 36

5.5.4 Drilling 36

5.5.5 Mounting and Soldering 38

CHAPTER 6 : RESULTS AND DISCUSSIONS

6.1 General 39

6.2 Circuit Operational 39

6.2.1 Pre – Amplifier 41

6.2.2 Demodulator 41

6.2.3 Low – Pass Filter 42

6.2.4 Multistage Amplifier 42

6.3 Troubleshooting 44

6.4 The result after the FM signal injected at the input 45

6.4.1 The Schematic Diagram (with the point of where the signal is tested) 45

6.4.2 Results 47

6.4.2.1 At Point 1 47

3.1.5 Helical Antenna 22

CHAPTER 4 : PROJECT PLANNING

4.1 Project Overview. 24

4.2 FM Receiver 25

4.3 Antenna 27

CHAPTER 5 : HARDWARE DEVELOPMENT

5.1 General 31

5.2 The Circuit Idea 31

5.3 The Tuner 32

5.4 Schematic Circuit Drawing 33

5.5 Components Assembly 33

5.5.1 Planning and Layout 33

5.5.2 Design on Printed Circuit Board (PCB) 36

5.5.3 Etching 36

5.5.4 Drilling 36

5.5.5 Mounting and Soldering 38

CHAPTER 6 : RESULTS AND DISCUSSIONS

6.1 General 39

6.2 Circuit Operational 39

6.2.1 Pre – Amplifier 41

6.2.2 Demodulator 41

6.2.3 Low – Pass Filter 42

6.2.4 Multistage Amplifier 42

6.3 Troubleshooting 44

6.4 The result after the FM signal injected at the input 45

6.4.1 The Schematic Diagram (with the point of where the signal is tested) 45

6.4.2 Results 47

6.4.2.1 At Point 1 47

6.4.2.2 At Point 2 49
6.4.2.3 At Point 3 50
6.4.2.4 At Point 4 51

CHAPTER 7 : CONSLUSION AND RECOMMENDATIONS
7.1 Conclusion 52
7.2 Recommendation 53

REFERENCES 54

APPENDIX 1 : List of Components 56

LIST OF TABLES

Table		Page
1.1	Frequency bands for communication systems	5
4.1	The table of the distance and its output	27
4.2	Types of antenna and its radiation pattern	28
6.1	The problems encountered during the troubleshooting	44

LIST OF FIGURES.

Figure		Page
2.1	The modulator produced a modulated signal	7
2.2	LC circuit Q must be low enough to give band pass including modulation sidebands	8
2.3	The simplest type of FM modulator uses a mechanical or electromechanical device	10
2.4	The simplest type of AM detector – diode detector	11
2.5	The output voltage after the signal passes through the FM detector	12
2.6	An improved form of FM detector	13
3.1	Monopole antenna	16
3.2	Example monopole antenna	17
3.3	Dipole antenna derived from two-wire transmission line	19
3.4	Other types of dipole antennas	20
3.5	A Yagi – Uda, or Yagi antenna	22
3.6	Helical antenna	23
4.1	FM Receiver block diagram	25
4.2	FM Receiver with range detection	26
4.3	Some examples of the dipole antenna	30
5.1	The idea of the circuit	31
5.2	Schematic diagram of the FM Receiver	35
5.3	Printed circuit layout on the PCB	37
6.1	The schematic diagram of FM Receiver in block structure	40
6.2	The schematic diagram of FM Receiver with points	46
6.3	No RF input is injected	47

6.4	The frequency modulation 50KHz and the carrier frequency 91MHz is applied at the input	48
6.5	The output of the pre-amplifier	49
6.6	The output of the low-pass filter	50
6.7	The audio output at the speaker	51

CHAPTER 1

INTRODUCTION

1.1 General

Detectors are circuits that remove the intelligence from a modulated carrier which is also called demodulators. This is done by converting the modulated high frequency carrier into a varying voltage that corresponds to the original modulating signal. The output of a detector has essentially the same variations as the signal that modulated the r-carrier at the transmitter. The output has been distorted if the variations are not the same.

There are two major classes of detectors: those used for the detection of AM signals and those used for the detection of FM signals.

For this project, we want to apply the FM signals. The receiver will receives or detects the signal and then track the location of the signals. The transmitter is attached somewhere in the vehicle (hidden places), then it will transmit the signal when it is operated, through a broadcasting antenna. This signal must be a signal that cannot be heard or produces any noise.

The owner of the vehicle is equipped with a receiving antenna or a handheld receiver (battery operated), which picks up the signal and sends it to the receiver. The idea where the system works is very much like a radio, where the owner tunes into the signal, to detect or track the location. This is to be done between few kilometres to detect or to pick up the signal.

The handheld receiver to be built is complete with the receiving antenna and the volume, so the signal volume is loud or quiet depending on whether the receiving antenna is pointing away at or away from the transmitter. This will allow the owner of the vehicle to determine the location of the vehicle. This could be done in certain range of distance.

1.2 Objectives

The objectives of this project are:

i. To do research on radio transmit and receive.

ii. To do research on various antenna transmission pattern.

iii. To design and build radio receiver that sense the vehicle.

iv. To add on the location sensing or predicting function.

v. To test and commissioning the project.

1.3 Project Outline

Chapter 1 consists of the introduction and the objectives of the project. It describe briefly about the detector and the general idea and concepts of the project.

Chapter 2 discuss about the theory of the detector. This includes the AM and FM modulation and demodulation techniques.

Chapter 3 briefly describes the types of antennas and the antenna patterns.

Chapter 4 discuss about the project planning involving the receiver type to be used and the suitable antenna.

Chapter 5 describes the project hardware development, where the schematics circuit diagram and the circuit analysis is included.

Chapter 6 contains the results and discussions of the project, and also the troubleshooting done to complete the project.

Chapter 7 includes the conclusion and recommendation for future improvement.

CHAPTER 2

LITERATURE REVIEW

2.1 General

The term communication systems refers to any type of radio frequency (RF) or optical frequency system in which the main objective is to transfer information from one point to another. The means of communication may be by land lines, underground cables, underwater cables, ground-wave propagation, free-space propagation, tropospheric scatter propagation, ionospheric reflection propagation, ground-to-ground microwave relay, ground-to-ground fibre optics relay, ground-to-satellite-to-ground relay and other systems. [1]

Table 1.1 shows the frequency bands for communication systems, which shows the frequency band names and frequency coverage information for communication systems.

Frequency	Wavelength	Frequency Band
3-30 KHz	10^5-10^4 m	VLF (very low frequency)
30-300 KHz	10^4-10^3 m	LF (low frequency)
0.3-3 MHz	10^3-10^2 m	MF (medium frequency)
3-30 MHz	10^2-10 m	HF (high frequency)
30-300 MHz	10-1 m	VHF (very high frequency)
0.3-3 GHz	1-0.1 m	UHF (ultra high frequency)
3-30 GHz	10-1 m	SHF (super high frequency)
30-300 GHz	1-0.1 cm	EHF (extremely high frequency)
0.3-3 THz	1-0.1 mm	Band 12
1-417 THz	300-0.72 mm	Infrared
417-789 THz	0.72-0.38 mm	Visible light
789 to 5 x 10^6 THz	0.38 to 6 x 10^{-5} mm	Ultraviolet
3 x 10^4 to 3 x 10^8THz	100 to 1 x 10^{-2} A	X-rays
>3 x 10^7 THz	< 0.1 A	Gamma rays

Table 1.1 Frequency bands for communication systems [1]

In the most general case, a receiving system consists of an antenna, an antenna coupling circuit (matching networks, balun transformers), a transmission line, and the receiver. The minimum signal level that can be detected by a receiver, a spectrum analyzer, or a field strength meter is limited by the presence of noise.

2.2 Radio Modulation

Radio frequency can be transmitted over long distances, but carry no information unless they are modulated. There are several ways of modulating a carrier signal. The modulating signal, for example the data we want to transmit, is known as the baseband. Baseband is the band of frequencies representing the original signal.

The utilization of communication channel requires a shift of the range of baseband frequencies into other frequency ranges suitable for transmission, and a corresponding shift

back to the original frequency range after reception. This shift is accomplished by using modulation.

Modulation is defined as the process by which some characteristic of a carrier is varied in accordance with a modulating wave. Modulation is performed at the transmitting end of the communication system. After receiving a signal original baseband signal is restored by using demodulation.

Demodulation is the way to restore the original baseband signal.

2.3 Modulators and Demodulators

Modulation is the process of transferring information signals to a high-frequency carrier. A high-frequency signal has two different parameters that could be modulated (varied) in order to make it carry the information we want to transmit. They are amplitude modulation (AM) and frequency modulation (FM). If the modulator causes the amplitude of the carrier wave to vary in accordance with the modulating signal, it is called an AM modulator. If the modulator causes the frequency of the carrier wave to vary, it is an FM modulator. In the next section, each of this modulation technique will be described.

The modulator receives two inputs: the modulating signal and the carrier wave or pulse train to be modulated. The modulator then delivers an output that consists of the carrier, varying according to some characteristic of the modulating signal. The modulated signal is a composite signal that contains not only the frequency of the carrier and the modulating signal, but also their sum and difference frequencies as well.

Figure 2.1 shows the modulator produces a modulated signal. Modulators are usually used to transfer intelligence carried by a relatively low-frequency signal to a higher frequency wave.

Figure 2.1 The modulator produced a modulated signal.

Meanwhile demodulators are circuits the recover, or extract, the intelligence from a modulated signal. They are often referred to as detectors. A detector delivers and output signal has the same varying characteristics as the modulating signal originally used to produce the modulated wave. Most detectors received only a single input, namely the modulated signal. The detector reinserts the carrier into the signal before it removes the intelligence.

The most important characteristic of a detector are:

i. Linearity, or freedom from distortion

ii. Sensitivity, or the ability to amplify as well as demodulate the signal

iii. Selectivity, or the ability to respond to a given band of frequencies and not respond to frequencies outside of the band

iv. Signal handling, or the ability to demodulate large-amplitude input signals without producing excessive distortion.

2.3.1 Amplitude Modulation (AM)

Amplitude modulators vary the amplitude, or strength, of an r-f carrier in accordance with the modulating signal. And amplitude-modulated signal contains side bands which actually contain the signal intelligence. These side bands are produced when the r-f carrier and the modulating signal are both applied to a nonlinear device such as a tube or transistor.

For standard AM signals, the modulating signal is removed from the output of the modulator by filtering, and only the r-f carrier and the side bands are used.

Many circuit configurations have been used to amplitude-modulate a carrier frequency. Simple circuit in Figure 2.1 shows the modulation of the latter will produce an AM output, since the current gain of a transistor depends on the collector current.

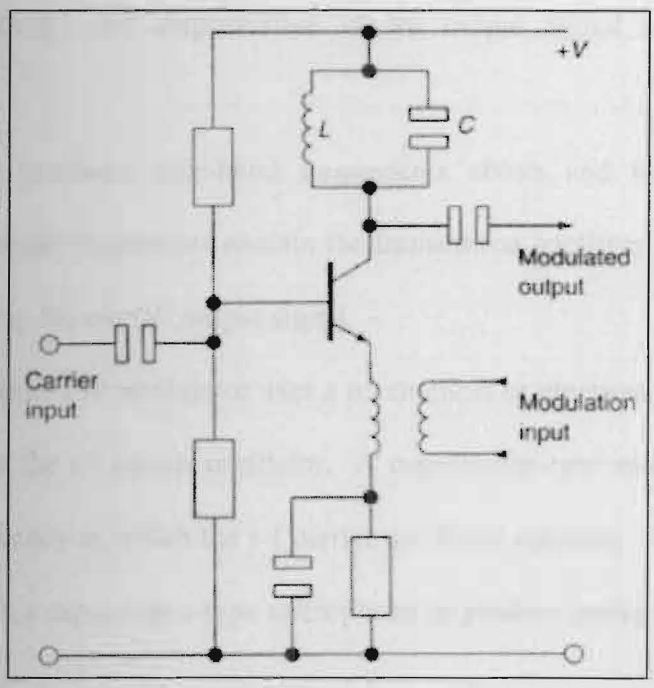

Figure 2.2 LC circuit Q must be low enough to give band pass including modulation sidebands. [2]

The linearity of a modulator will be improved by the use of feedback. If the AM output is detected in a low-distortion detector, its envelope may be compared with the original modulating signal.

2.3.2 Frequency Modulation (FM)

Frequency modulators vary the instantaneous frequency of an r-f carrier in accordance with the amplitude of a modulating signal. Essentially, an FM modulator consists of a stage or device whose reactance is varied by the modulating signal; this change in reactance is then used to vary the frequency of oscillation of the oscillator that generates the r-f carrier. Unlike amplitude modulation, which is accomplished after the r-f carrier has been amplified, sometimes to a very high level, frequency modulation is carried out at a low power level. All amplification of the output signal takes place after modulation.

FM modulation produces side-band frequencies above and below the center frequency. These side-band frequencies contain the transmitted intelligence, and with, the center frequency, make up the overall output signal.

The simplest type of FM modulator uses a mechanical or electromechanical device to vary the frequency of the r-f carrier oscillator. A capacitance-type microphone can be used to control the frequency at which the r-f carrier oscillator operates. It is as shown in Figure 2.3 below. It uses a capacitance-type microphone to produce audio FM modulation.

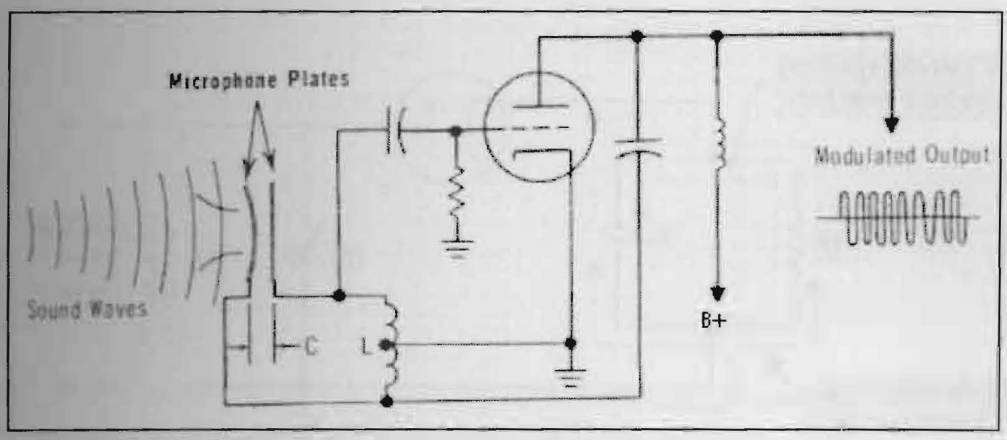

Figure 2.3 The simplest type of FM modulator uses a mechanical or electromechanical device. [3]

2.4 AM detectors

An AM detector produces an output voltage that corresponds to the variations in peak-to-peak amplitude of its input signal. It is done using two steps. First, it rectifies the input signal, leaving only the positive or negative portion. Then by means of a suitable filter network it produces a voltage that follows the envelopes on the positive and negatives sides are 180 degrees out of phase. If the signal is merely filtered, the positive and negative envelopes would cancel each other, and the intelligence would be lost. In most applications, it is most important whether the detector removes the positive or negative portion of the AM signal, since both halves have the same variation.

There are various types of AM detectors, with the one used for a particular application depending on the desired characteristics. The simplest type of AM detector is the basic diode detector shown in Figure 2.4 below.